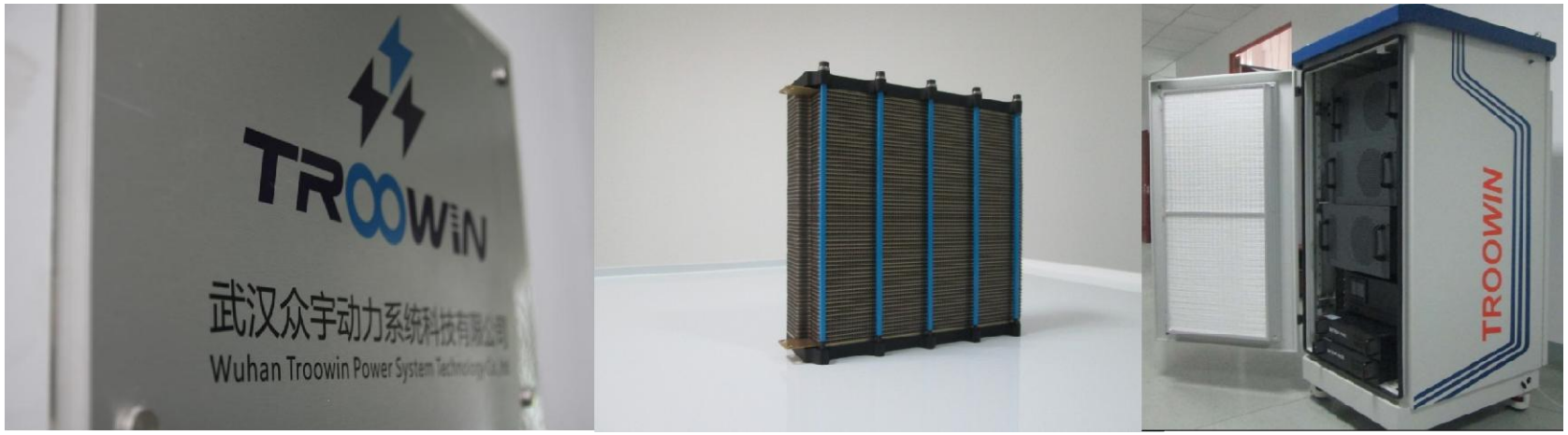

Development of backup power systems at Wuhan Troowin Power System

Zhigang Qi

Workshop on Fuel Cell Backup Power for Telecommunication Base Stations

Wuhan University of Technology, Wuhan, China, May 29, 2015

Contents

- Wuhan Troowin Power
- Air-cooled Stacks
- Backup Power Systems
- Field Trials
- Challenges
- Summary

Wuhan Troowin Power System

- Established in 2011 with headquarters located in Wuhan
- Focused on the R&D and marketing of PEMFC and DMFC stacks and systems
- Experienced management team and world-class technical team
- Established broad domestic and international collaborations
- Well financed by visionary investors

Technology Platform

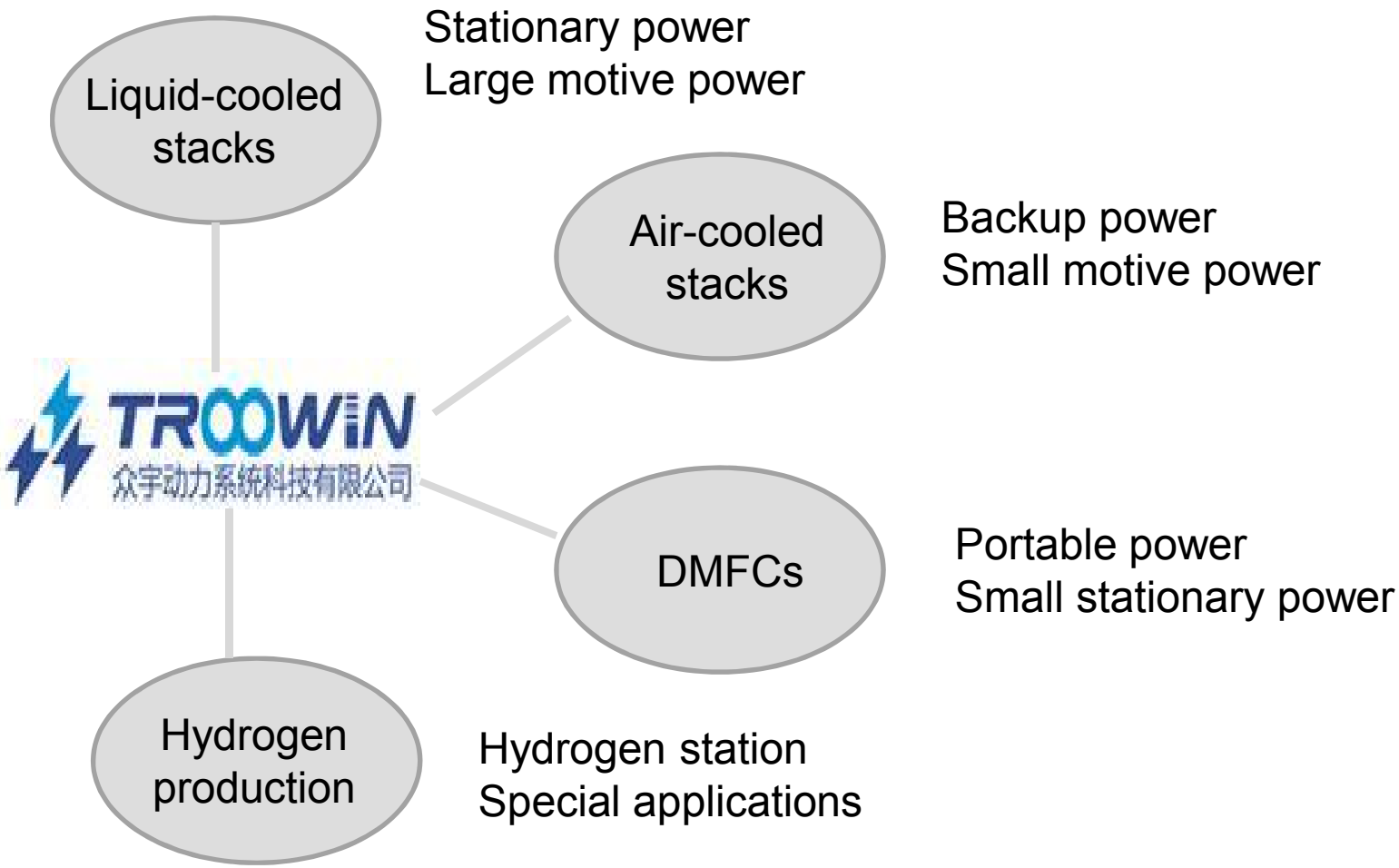

Air-cooled Stacks

Power(W)/ Cell number	Length (mm)	Width (mm)	Height (mm)	Weight (kg)	Mass PD (W/kg)	Vol. PD (W/L)
50/5	121	51	55	0.65	77	147
100/5	205	51	55	1.10	91	174
300/30	121	51	140	1.21	248	347
1200/60	205	51	230	3.50	343	499

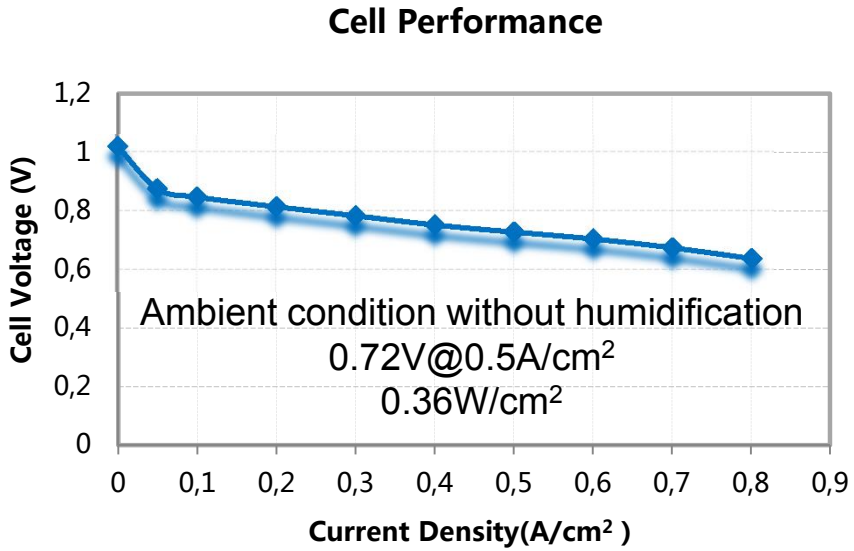

Air-cooled Stacks

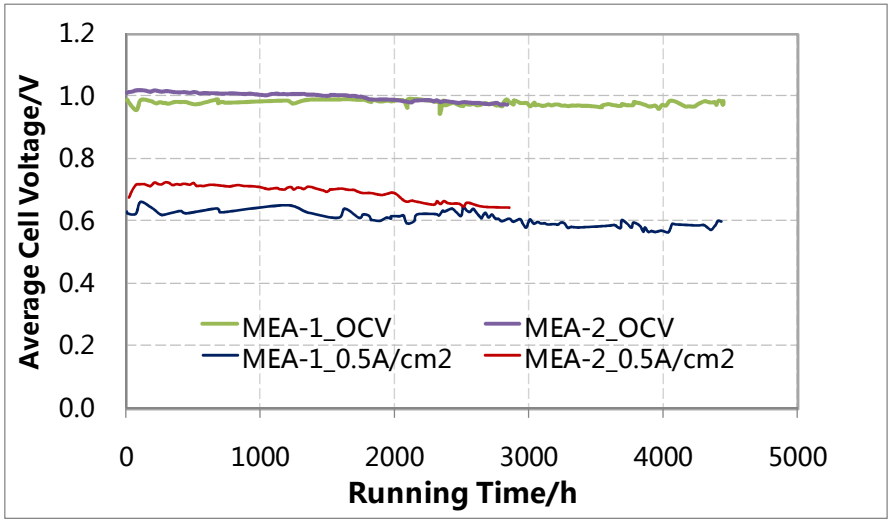

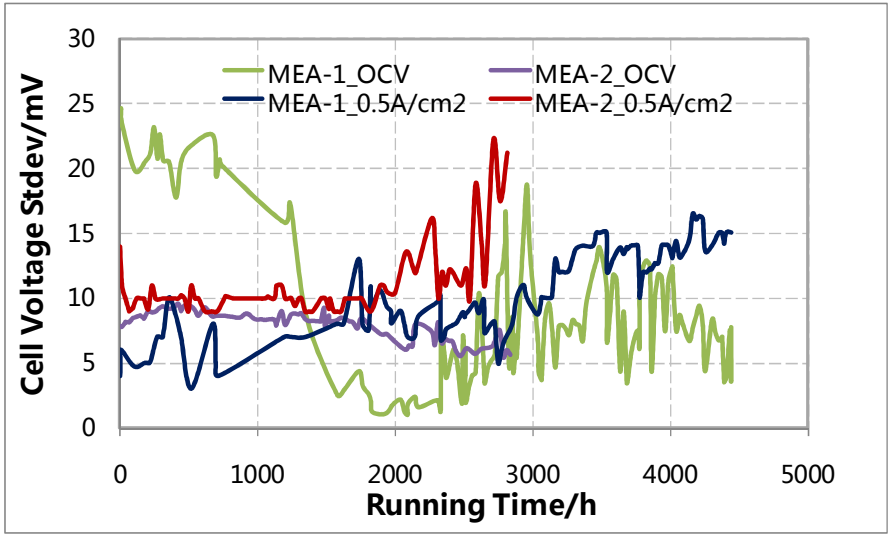

- Operated 24/7 automatically
- 97% H_2 utilization
- Stacks with MEA1
  - 14μV/h decay rate in 4500h at 0.5 A/cm^2
  - OCV changed little in 4500h
- Stacks with MEA2
  - 28μV/h decay rate in 2800h at 0.5 A/cm^2
  - OCV also showed apparent decline
- Cell voltage variation behaved differently

Backup Power Systems

Front View

Back View

Backup Power Systems

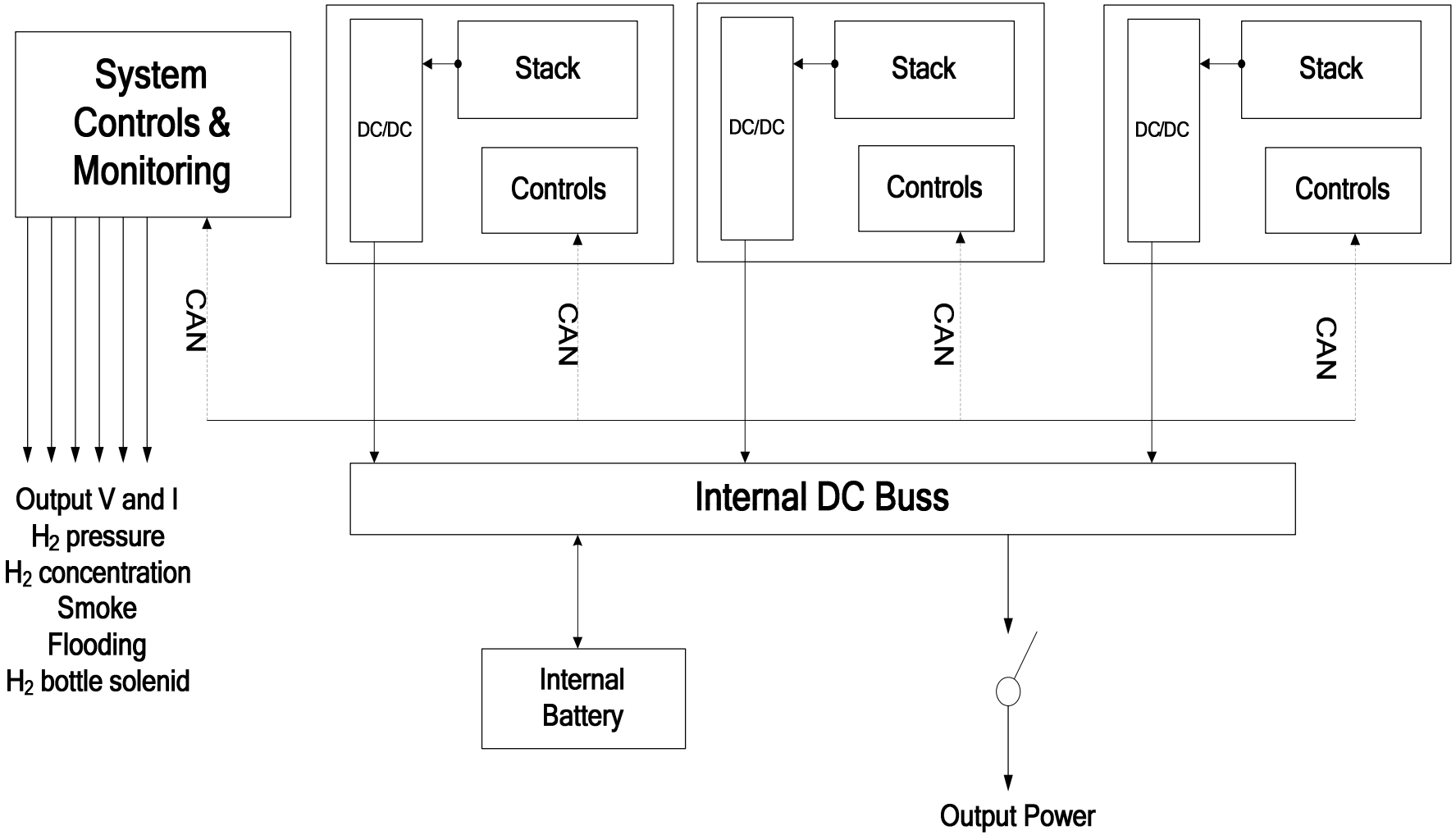

Backup Power Systems

- 3kW system contains 3 stack modules
- Each module works independently, and hot-swappable
- Modular design makes the system scalable
- 45% system efficiency
- Weighted noise voltage 0.72mV (<2mV)
- Peak-peak noise voltage 52mV (<200mV)
- Standby power consumption 1.1%
- Output voltage stability ±0.4%
- Remote messaging, measurement and control

Backup Power Systems

- Remote communications
  - Computer ↔ company server ↔ internet ↔ GPRS ↔ remote monitoring module ↔ FC system
- Remote measurement
  - Stack output voltage and current
  - FC system output voltage and current
  - Stack temperature and environment temperature
  - H_2 pressure
- Remote messaging
  - Stack temperature high, environment temperature high
  - FC output voltage high/low, output current high
  - H_2 pressure high/low, H_2 leakage
  - Fan normal/abnormal
  - Grid power on/off
  - Station DC buss voltage high/low
- Remote control
  - Start up/shut down FC system
- Message to cell-phone
  - FC system state
  - Problem codes

Field Trials

- Started on Feb. 7, 2015 in Sichuan province, experienced 7-30 ^{o}C
- FC output connected to the DC buss of the station
- A 100A DC contactor added between the station's battery and the station's DC buss
- 6 H_2 cylinders in two groups

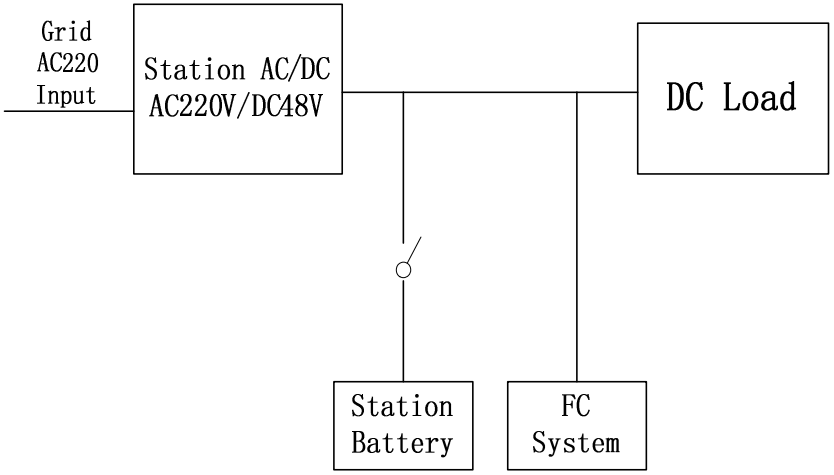

FC H_2

Field Trials

Date	Startup Type	Weather	T (°C)	Startup time	Shutdown time	Duration (min)
2015/3/6	Power off	Cloudy	13	8:25	11:27	182
2015/3/6	Remote	Cloudy	13	16:30	16:35	5
2015/3/9	Remote	Cloudy	18	16:36	16:47	11
2015/3/16	Power off	Cloudy	16	9:59	10:09	10
2015/3/20	Remote	Raining	16	11:15	11:21	6
2015/3/24	Power off	Raining	17	9:35	10:13	38
2015/4/14	Power off	Raining	21	10:23	11:00	37
2015/4/19	Power off	Raining	22	03:00	04:03	63
2015/5/4	Power off	Raining	15	18:07	18:29	22
2015/5/22	Power off	Raining	19	01:10	17:10	960
Cumulated Running Time						1334

Field Trials

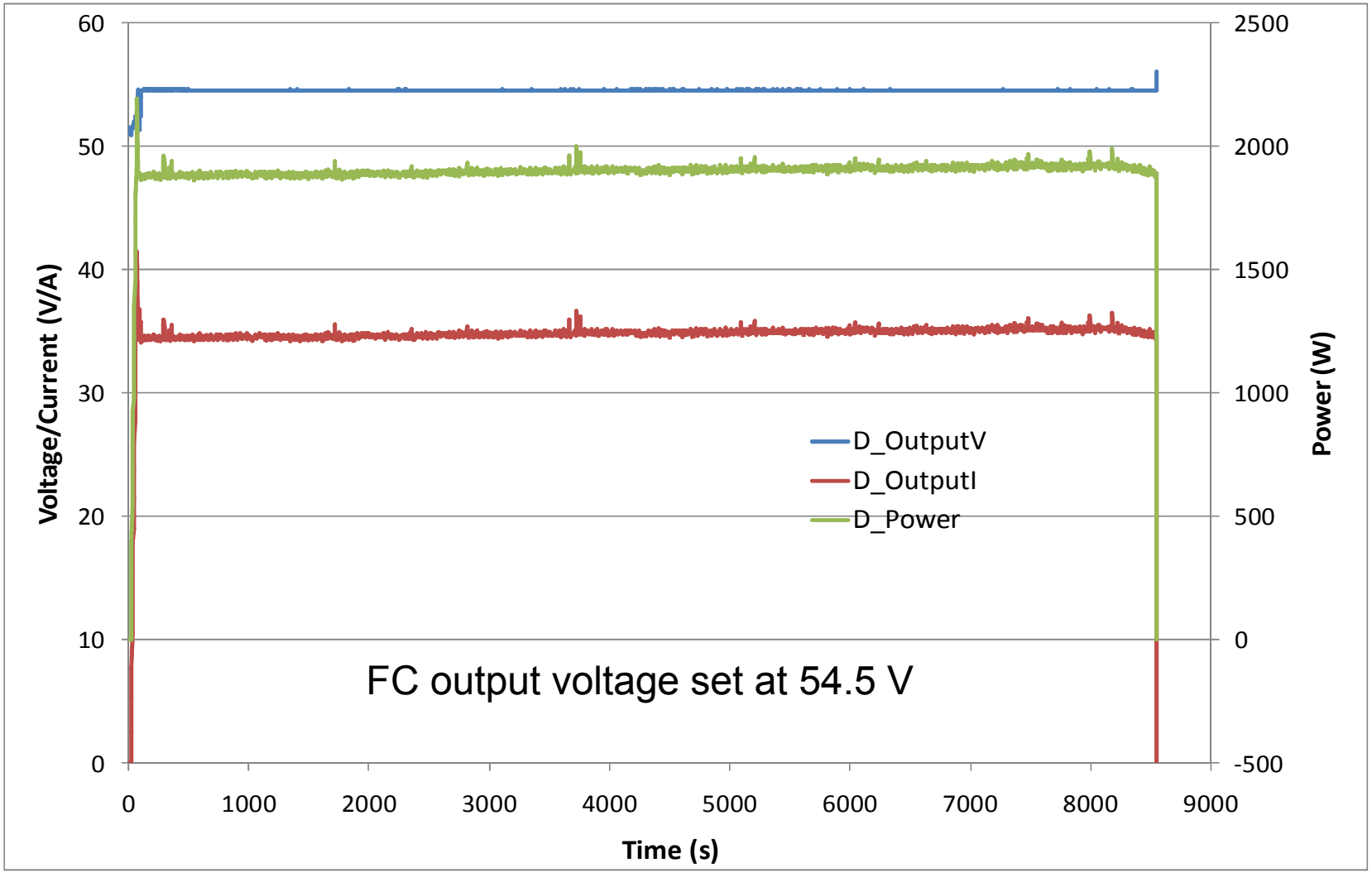

Challenges

- Major obstacles
  - Misconceptions
  - Used to traditional technologies
  - Lack of urgency and responsibility
  - Higher initial investment
  - Short vision
  - Lack of hydrogen infrastructure
- What should be done
  - Collaborative efforts by governments, companies, and the public
  - Government reinforcement
  - Government subsidies

Summary

- Troowin Power's air-cooled stacks have higher power densities than many peer's stacks
- Running for 4500h has been achieved in lab
- Backup power systems adopt modular design composed of independent hot-swappable stack modules
- One system performs well in field trials
- System optimization continues
- Marketing fuel cell backup power systems faces big challenges in China, governments involvement is crucial